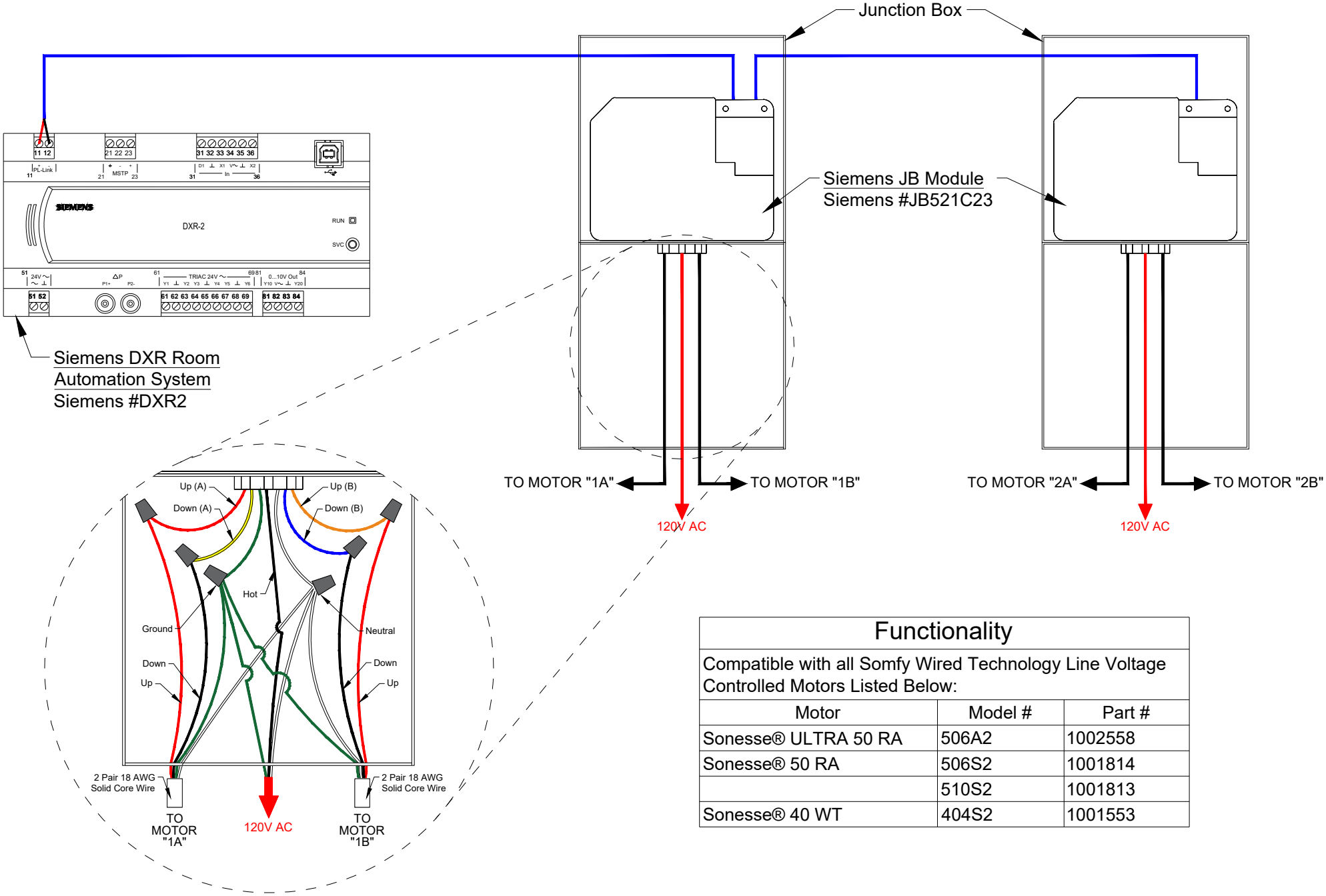

Functionality

Compatible with all Somfy Wired Technology Line Voltage Controlled Motors Listed Below:

Motor	Model #	Part #
Sonesse® ULTRA 50 RA	506A2	1002558
Sonesse® 50 RA	506S2	1001814
	510S2	1001813
Sonesse® 40 WT	404S2	1001553

© 2015 Somfy Systems, Inc. All Rights Reserved. This drawing is the property of Somfy Systems, Inc.. The graphics, information and specific ideas in this document are the exclusive property of Somfy Systems, Inc. and must not be made public, copied, or sold. Others seeking permission to reproduce this document, in whole or in part, must obtain permission from Somfy Systems, Inc. in writing.

Tel: 1-800-64-SOMFY
Fax: 1-609-495-8165
www.somfysystems.com

somfy

SIEMENS

Date:	08/29/18
Print Size:	8.5" x 11"
Scale:	NTS
Sales:	N/A
Drawn by:	RV
Checked by:	PK / TS

Revisions

Rev	Date	By	Description
-	--/--/--	-	
-	--/--/--	-	
-	--/--/--	-	
-	--/--/--	-	
-	--/--/--	-	

Dwg Title: Siemens DXR with WT Integration Wire Detail

Dwg No.: SIEMENS-WIRING-01

Project name: Technical Library

Client: Somfy Systems, Inc.

Address: 121 Herrod Boulevard
Dayton, NJ 08810